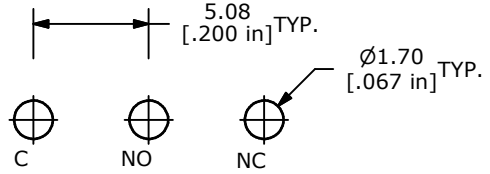

P.C. MOUNTING

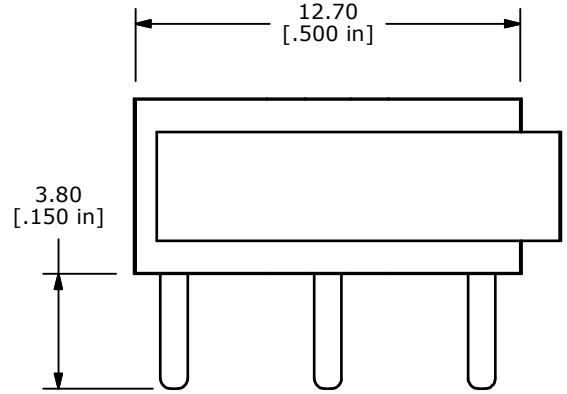

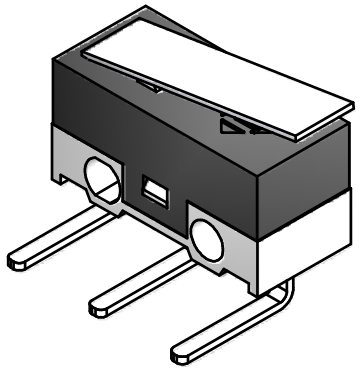

ISOMETRIC
SCALE: 3:1

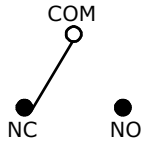

CIRCUIT: SPDT

C

O.P. (MM)	P.T. (MM)
8.8 ±0.8	1.6 Max.

O.P. = OPERATING POINT
P.T. = PRE-TRAVEL

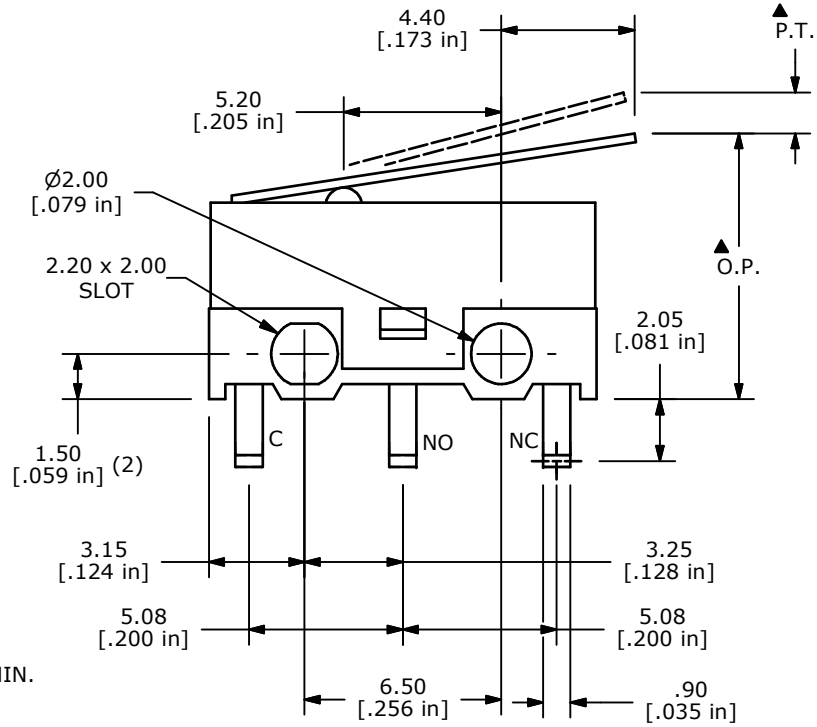

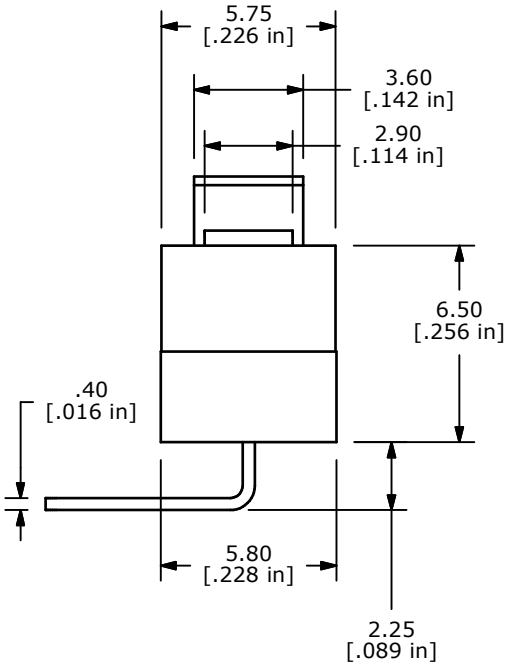

NOTES:
1. ALL DIMENSIONS IN MM [INCH]
2. GENERAL TOLERANCE: X.X=± 0.4
   X.XX=± 0.25
▲3. RATING: 3A @125VAC
   1.5A @250 VAC UL
▲4. OPERATING FORCE: 15± 10 GRAMS
5. OPERATING TEMP: -25˚C TO 75˚C
6. ELECTRICAL LIFE: 10,000 CYCLES MIN.
7. INSULATION RESISTANCE: 100 MEGA-OHMS MIN.
8. DIELECTRIC STRENGTH: 500VAC - 1 MINUTE
9. ▲ DENOTES CRITICAL PARAMETER.
10. 2002/95/EC (ROHS) COMPLIANT
11. PACKAGED IN TRAYS, 120 PIECES PER TRAY

REV	PCR NO	DESCRIPTION	DATE	BY
E	18157	REMOVE CE APPROVED FROM NOTES	6/24/08	BLR
D	18089	ADD NOTE 11	5/9/08	RC
C	18038	ADD O.P., P.T.	3/25/08	BLR

THE INFORMATION CONTAINED IN THIS DOCUMENT IS PROPRIETARY TO E-SWITCH AND IS NOT TO BE COPIED OR TRANSFERRED

E-SWITCH™

TITLE SS0750301F015V1A

SCALE	DATE	DR	DWG	REV
4:1	6/24/2008	BLR	Q971001	E